ACURA INSTALLATION INSTRUCTIONS	Accessory	Application	Publications No.
	REMOTE CONTROL ENGINE STARTER	2010 ZDX	BII 42767
			Issue Date FEB 2010

PARTS LIST

Remote Control Engine Starter Unit Kit P/N 08E91-TK4-200A

Transmitter

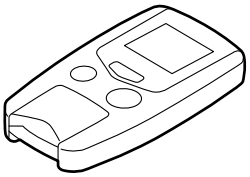

Control unit

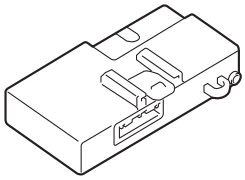

Antenna

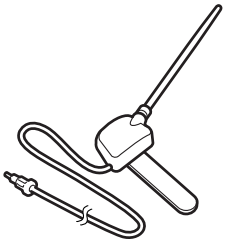

Key ring

Protective tape

Caution label

Fuse label

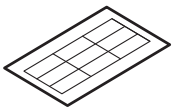

Accessory User's Information Manual

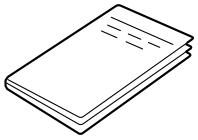

Quick start guide

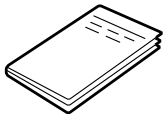

Remote Control Engine Starter Attachment Kit P/N 08E92-SZN-200A

Engine starter harness

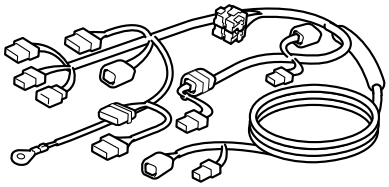

Control unit bracket

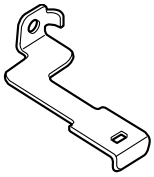

3 Relays

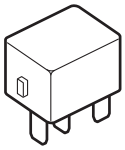

25 Wire ties

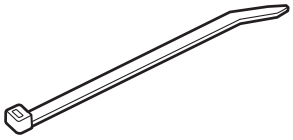

5 Urethane tapes

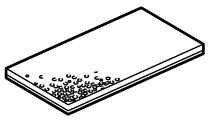

Template

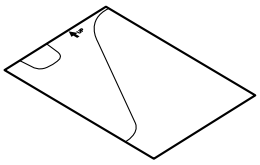

© 2010 American Honda Motor Co., Inc. – All Rights Reserved.

Pillar clip

TOOLS AND SUPPLIES REQUIRED

Phillips screwdriver
Flat-tip screwdriver
Small flat-tip screwdriver
Ratchet
10 mm and 12 mm Sockets
Torque wrench
10 mm Wrench
Diagonal cutters
Isopropyl alcohol
Shop towel
Tape measure
Scissors
Rubber mallet
HDS (Honda Diagnostic System)
Masking tape
Tape
Needle nose pliers
Plastic Trim Tool (P/N SILTRIMTL10)

Illustration of the Remote Control Engine Starter Installed on the Vehicle

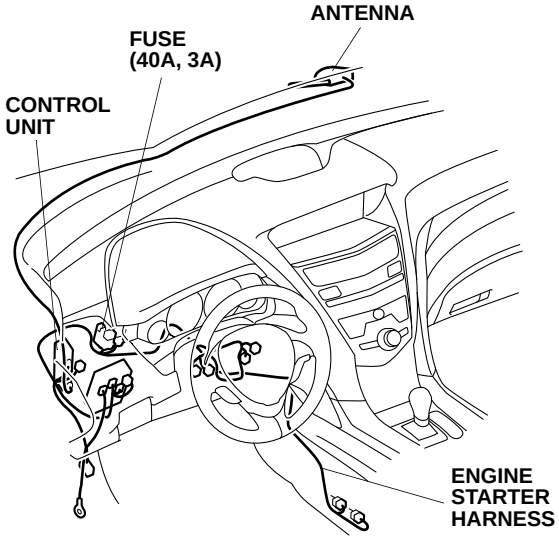

INSTALLATION

Client Information: The information in this installation instruction is intended for use only by skilled technicians who have the proper tools, equipment, and training to correctly and safely add equipment to your vehicle. These procedures should not be attempted by “do-it-yourselfers.”

NOTE: The antenna should be installed only if the ambient air temperature 15°C (60°F) or above.

1. Turn the ignition switch to the “II” position. If equipped, push the engine start switch twice to turn on the “II”. Do not push on the brake pedal.
2. Make sure you have the anti-theft codes for the audio unit and navigation system (if equipped), then write down the radio station presets.
3. Slide the driver’s seat all the way back.

© 2010 American Honda Motor Co., Inc. – All Rights Reserved.

4. Move the steering wheel down and out as far as it will go.

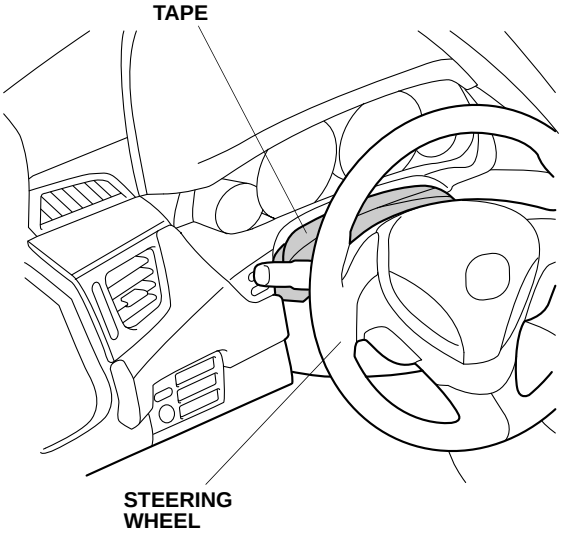

5. Attach masking tape to the steering column to protect it.

6. Remove two self-tapping screws and four hooks.

   NOTE: Adjust the angle of the steering wheel as needed to access the screws.

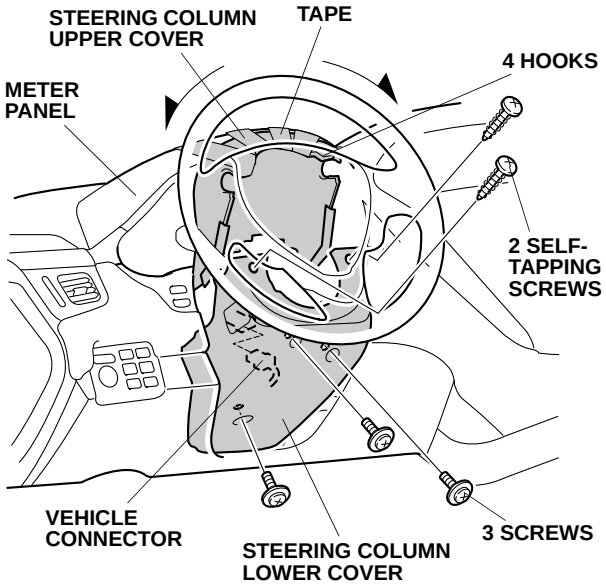

7. Secure the steering column upper cover to the meter panel with pieces of tape.
8. Remove the steering column lower cover (three screws and unplug the vehicle connector).
9. Disconnect the negative cable from the battery.

© 2010 American Honda Motor Co., Inc. – All Rights Reserved.

If the vehicle is equipped with a keyless starting system, go to step 10; if not, go to step 12.

10. Check the position of the switches on the control unit.

    NOTE:

    - The switches must be adjusted before the control unit is plugged in.
    - If the switch settings are not correct, the remote engine starter will not operate correctly.
    - If you are adjusting the switches with the control unit installed in the vehicle, touch the metal part of the screwdriver to any metal part of the vehicle to discharge any static electricity.
    - If you change the switch settings with the unit connected, you must disconnect the unit, and then reconnect it before the new settings are recognized.

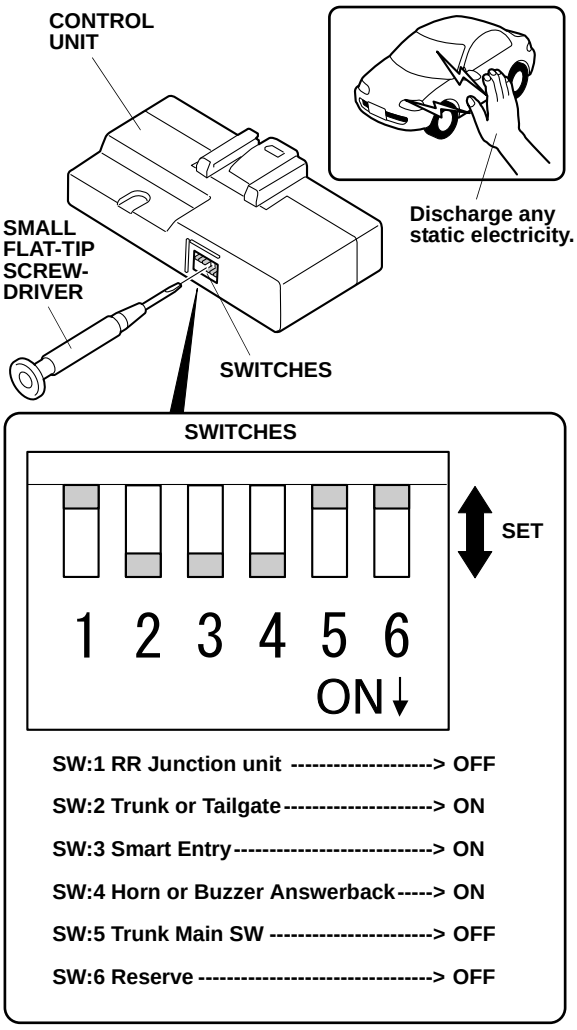

FOR VEHICLES WITH KEYLESS START SYSTEM

11. Using a small flat-tip screwdriver, adjust the switches on the control unit as shown. Go to step 14.

12. Check the position of the switches on the control unit.

    NOTE:

    - The switches must be adjusted before the control unit is plugged in.
    - If the switch settings are not correct, the remote control engine starter will not operate correctly.
    - If you are adjusting the switches with the control unit installed in the vehicle, touch the metal part of the screwdriver to any metal part of the vehicle to discharge any static electricity.
    - If you change the switch settings with the unit connected, you must disconnect the unit then reconnect it before the new settings are recognized.

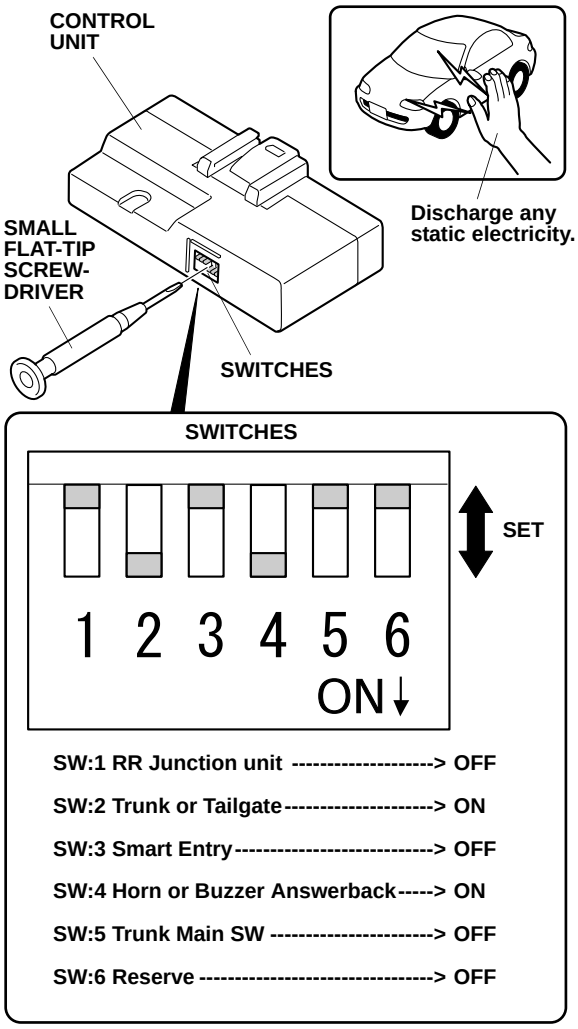

FOR VEHICLES WITHOUT KEYLESS START SYSTEM

13. Using a small flat-tip screwdriver, adjust the switches on the control unit as shown.

© 2010 American Honda Motor Co., Inc. – All Rights Reserved.

14. Using isopropyl alcohol on a shop towel, thoroughly clean the area where the protective tape will attach. Remove the adhesive backing from the protective tape and attach it to the control unit over the switch opening.

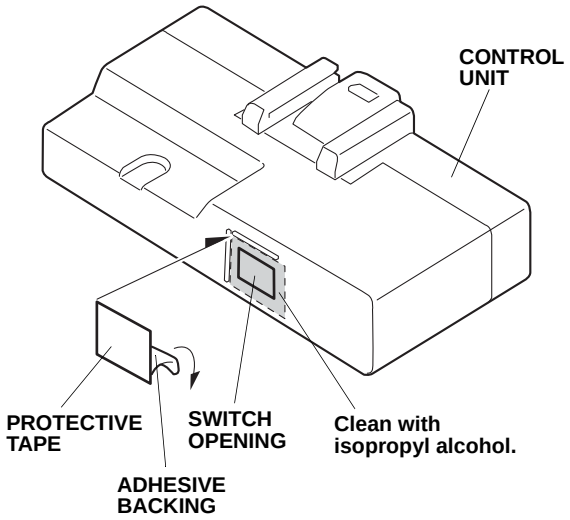

15. Open the sunglass holder. Remove the roof console (two self-tapping screws, two clips, and unplug the vehicle connectors).

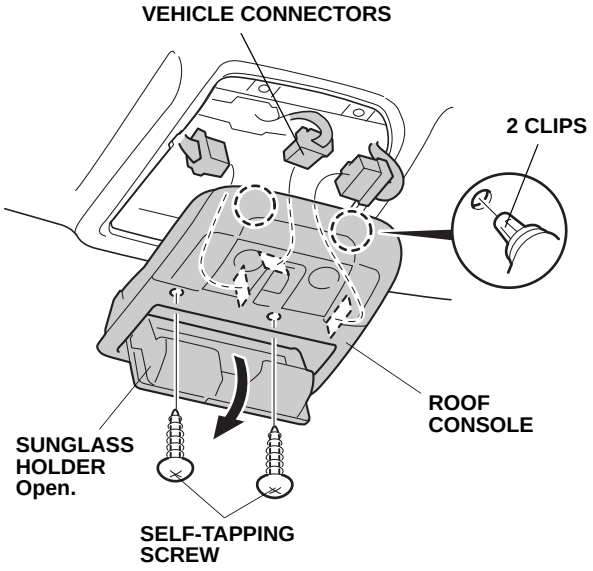

16. Remove the left sunvisor.
    - Turn the left sunvisor toward the driver's seat.
    - Locate the slot in the sunvisor holder, and insert a flat-tip screwdriver wrapped with masking tape into the slot. Push in the tab and rotate the sunvisor.
    - Unplug the vehicle connector.

    NOTE: If the retaining tab did not stay pushed in, return the left sunvisor to its original position and repeat the steps above.

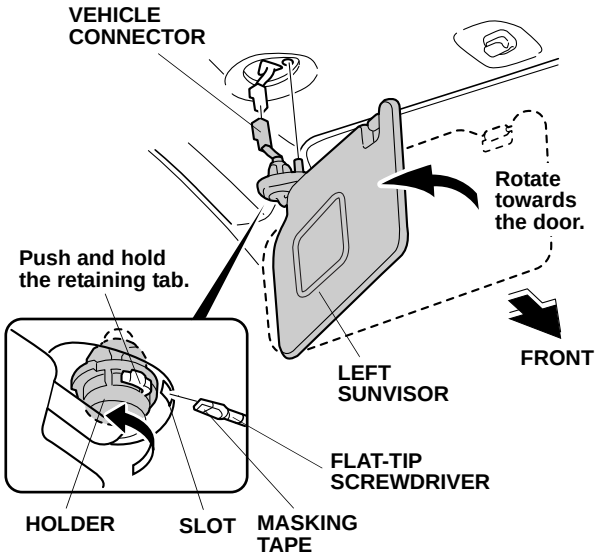

17. Remove two sunvisor holders.

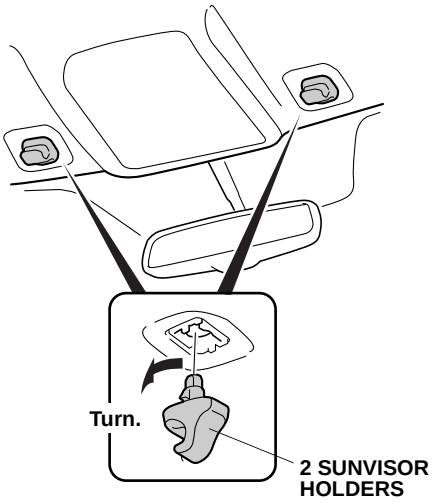

© 2010 American Honda Motor Co., Inc. – All Rights Reserved.

18. Pull back the weatherstrip. Use a rubber mallet wrapped with a shop towel to lightly tap the left A-pillar trim as shown to release the clip.

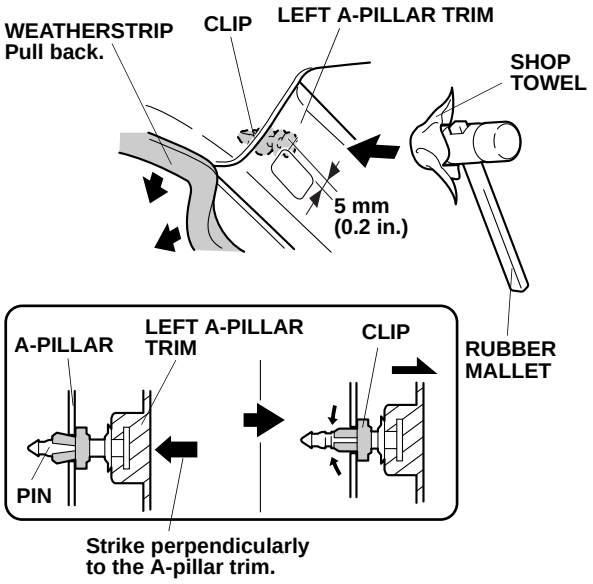

19. Pull back the weatherstrip, and remove the left A-pillar trim (one clip and unplug the vehicle connector).

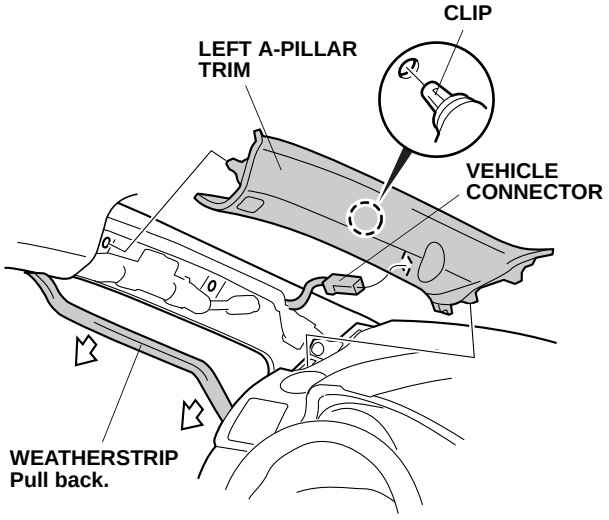

20. Remove and discard the clip from the left A-pillar trim, and install a new pillar clip (supplied).

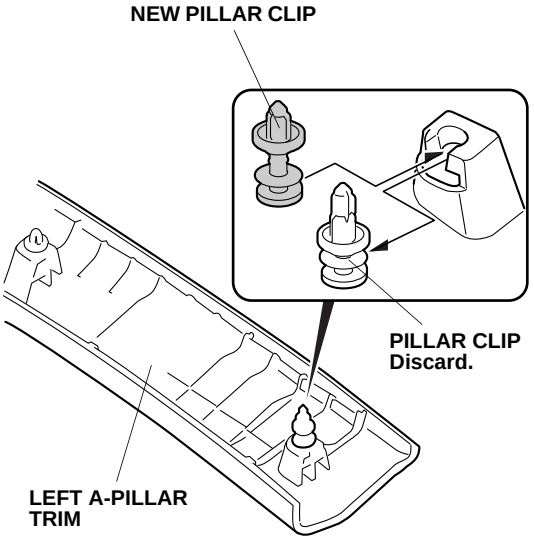

21. Remove the left dashboard side cover (six clips).

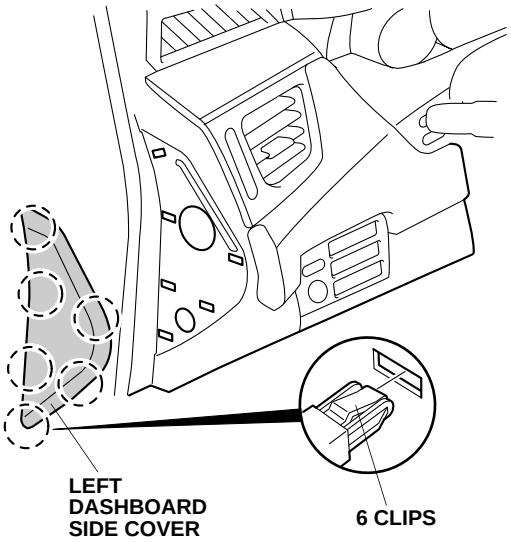

© 2010 American Honda Motor Co., Inc. – All Rights Reserved.

22. Remove the driver's under cover (turn the knob, three clips, two pins, two harness clips, and unplug the vehicle connectors).

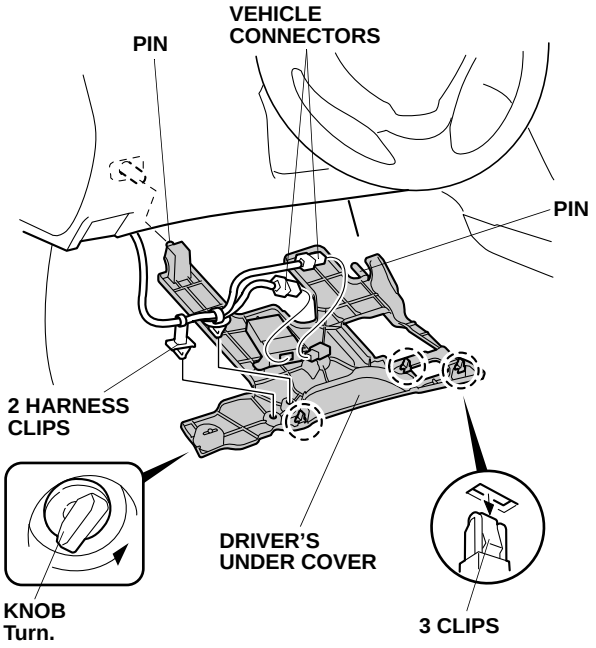

23. Remove the left front side step trim (two retaining tabs and four clips).

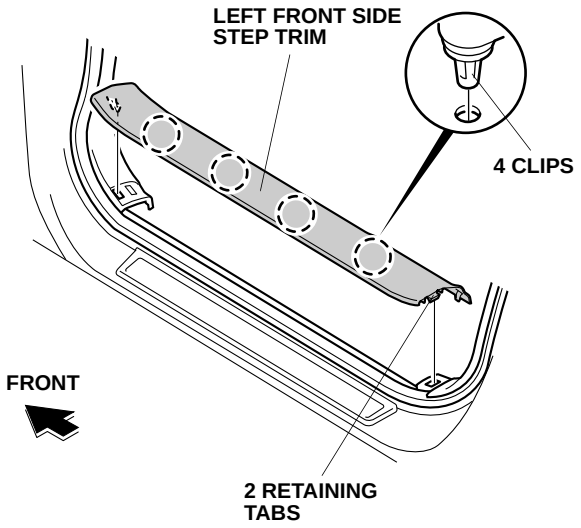

24. Pull back the weatherstrip. Remove the left kick panel (one cap, three hooks, one clip, and unplug the vehicle connector, if equipped).

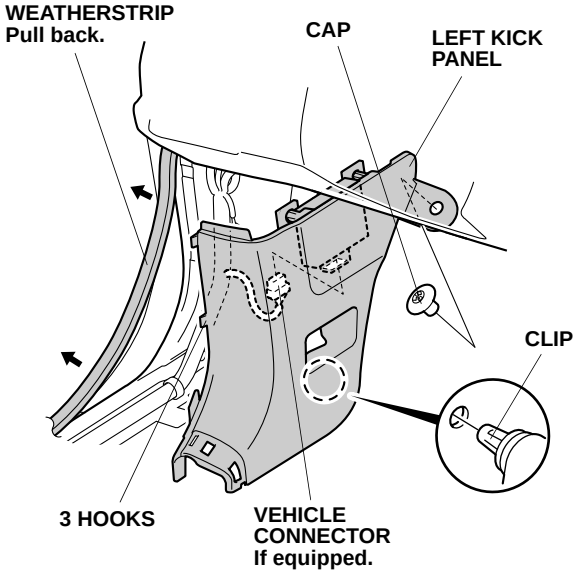

25. Remove the driver's console side trim (nine clips and unplug the vehicle connector, if equipped).

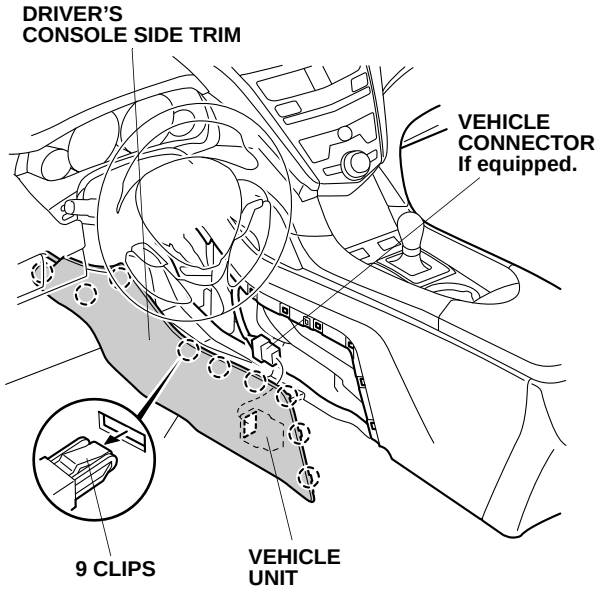

© 2010 American Honda Motor Co., Inc. – All Rights Reserved.

Installing the Antenna

26. Using two needle nose pliers, bend the antenna plate according to the full scale drawing as shown.

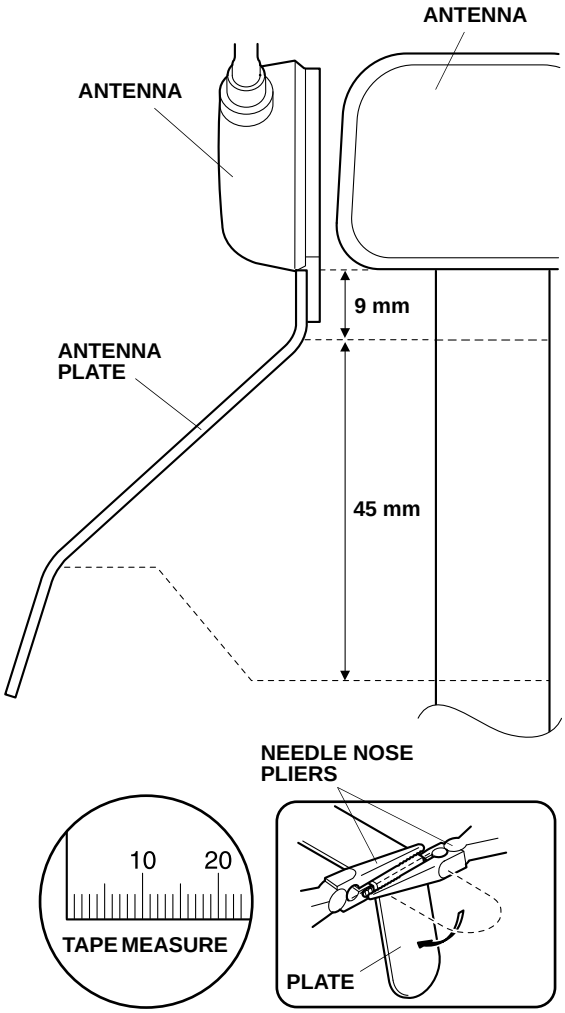

27. Use scissors to cut out the template.

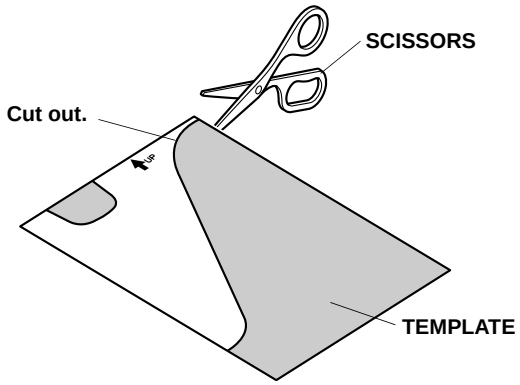

28. Attach the template to the front windshield with masking tape. Align the template with the black ceramic as shown.

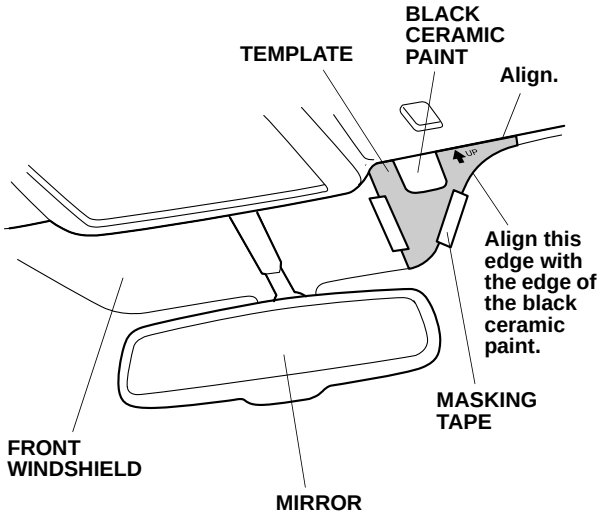

© 2010 American Honda Motor Co., Inc. – All Rights Reserved.

29. Starting at the antenna end of the cable, wrap three urethane tapes around the antenna cable at the measurements shown.

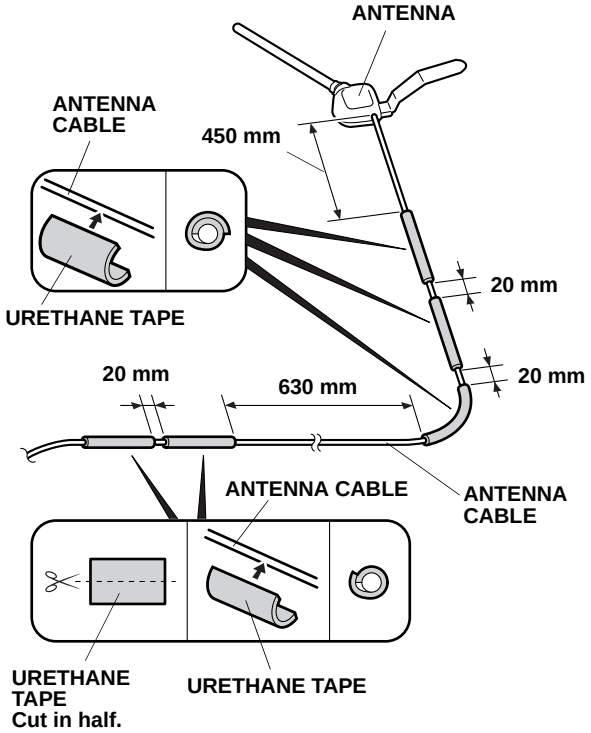

30. Cut one urethane tape in half. Wrap two cut pieces of urethane tape around the antenna cable at the measurements shown.

NOTE: Be careful not to crease the headliner for the following procedures.

31. Using isopropyl alcohol on a shop towel, thoroughly clean the area where the antenna will attach.

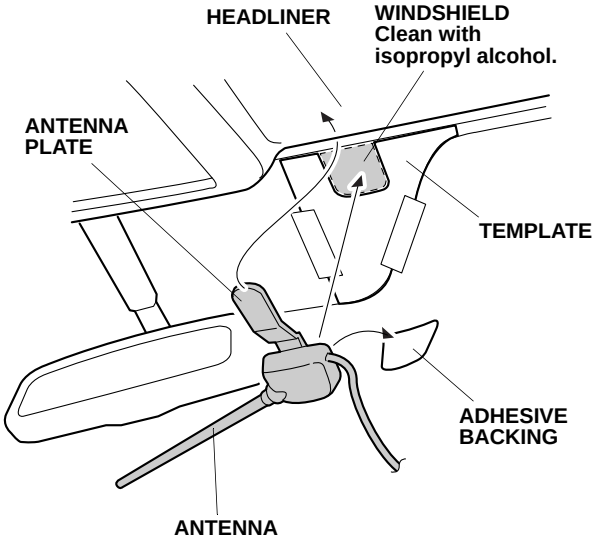

32. Remove the adhesive backing from the antenna. Insert the antenna plate under the headliner, align the antenna to the template, and attach the antenna to the windshield as shown.

    NOTE: Make sure that the antenna is firmly attached to the windshield.

33. Remove the template.

34. Push the antenna cable behind the headliner as shown.

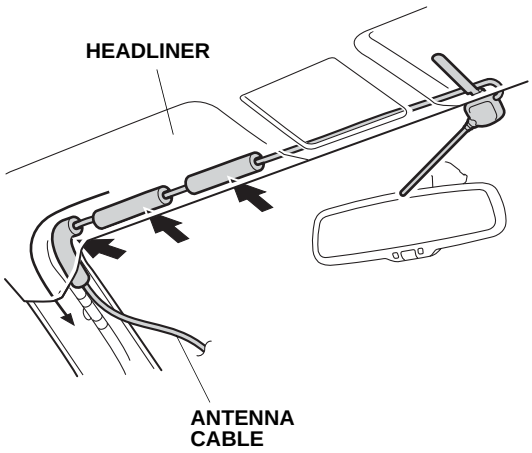

© 2010 American Honda Motor Co., Inc. – All Rights Reserved.

35. Using isopropyl alcohol on a shop towel, thoroughly clean the areas where the urethane tape will attach.

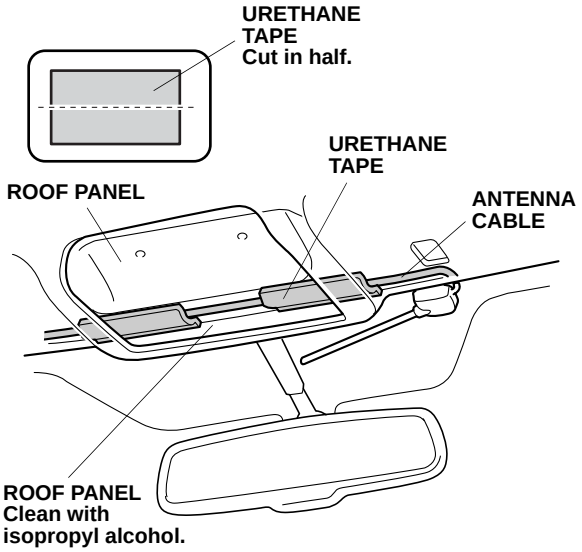

36. Cut one urethane tape in half. Secure the antenna cable to the roof panel with the two pieces of urethane tape.
37. Route the antenna cable and secure it to the vehicle harness with four wire ties.

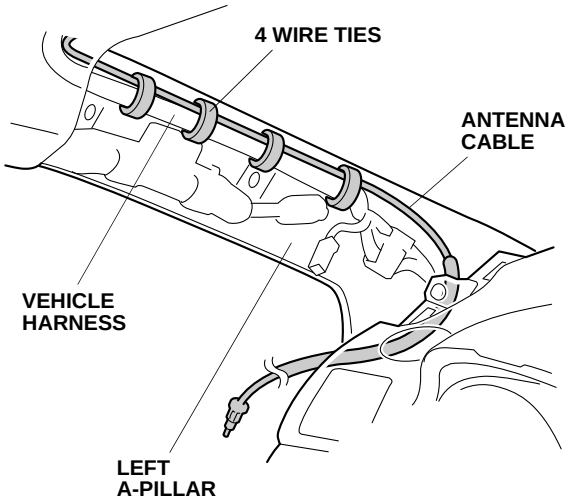

38. Pull back the weatherstrip.

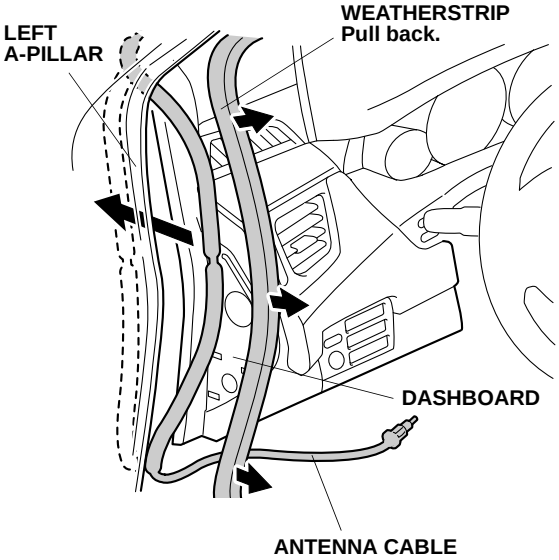

39. Route the antenna cable down next to the dashboard, and tuck the antenna cable between the left A-pillar and dashboard. Reinstall the weatherstrip.
40. Route the antenna cable to the driver's under cover opening.

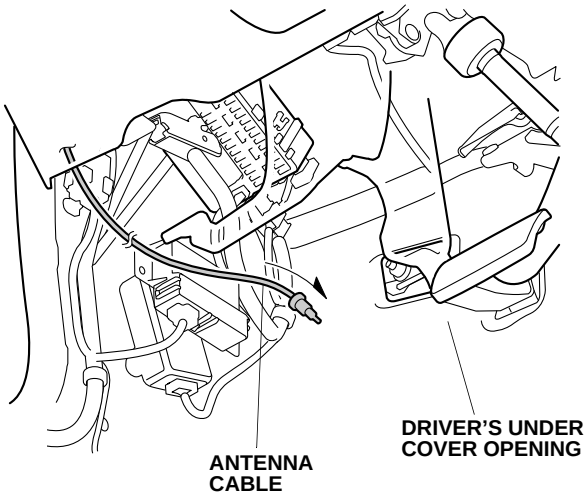

© 2010 American Honda Motor Co., Inc. – All Rights Reserved.

Routing the Engine Starter Harness

41. Using isopropyl alcohol on a shop towel, thoroughly clean the areas where the fuse labels will attach.

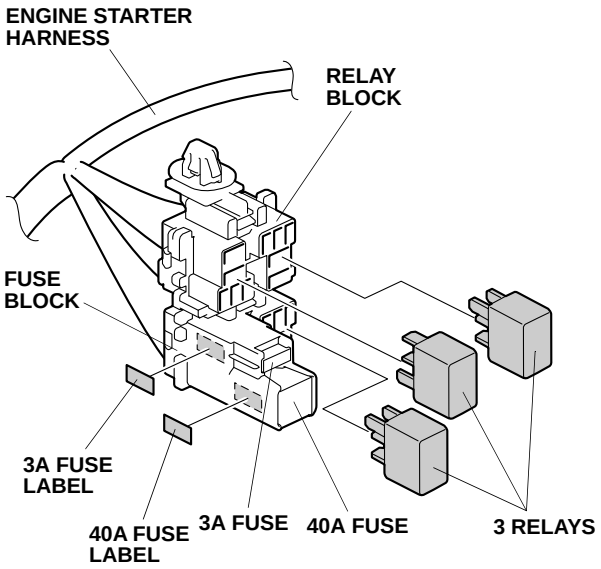

42. Attach the 40A and 3A fuse label to the engine starter harness fuse block.
43. Install three relays in the engine starter harness relay block.
44. Remove the tape and dummy connector from the vehicle 6-pin connector behind the fuse box. Plug the engine starter harness 6-pin connector into the vehicle 6-pin connector.

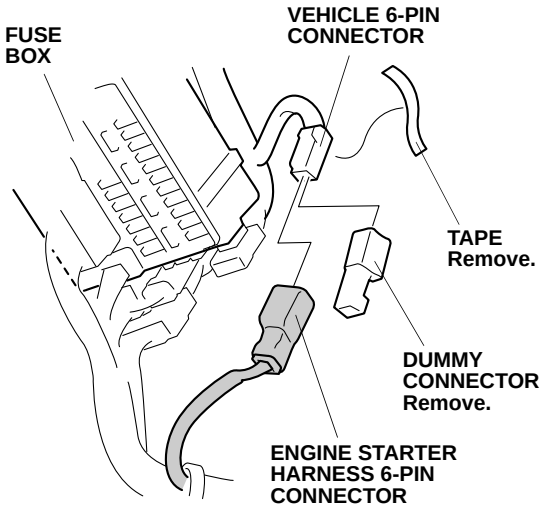

45. Secure the 6-pin connector from step 44 to the vehicle harness with one wire tie.

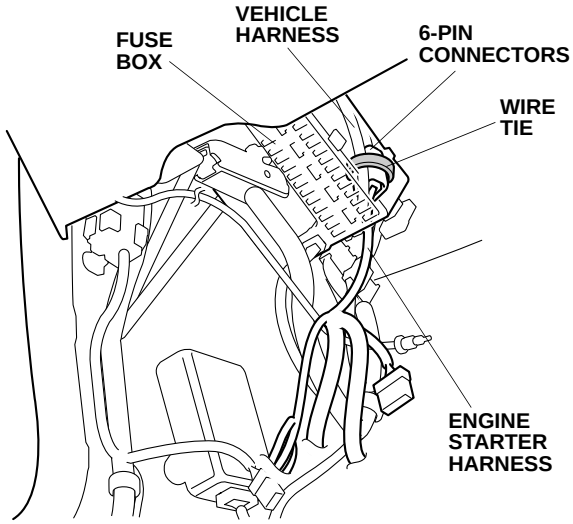

46. Route the engine starter harness along the vehicle harness as shown.

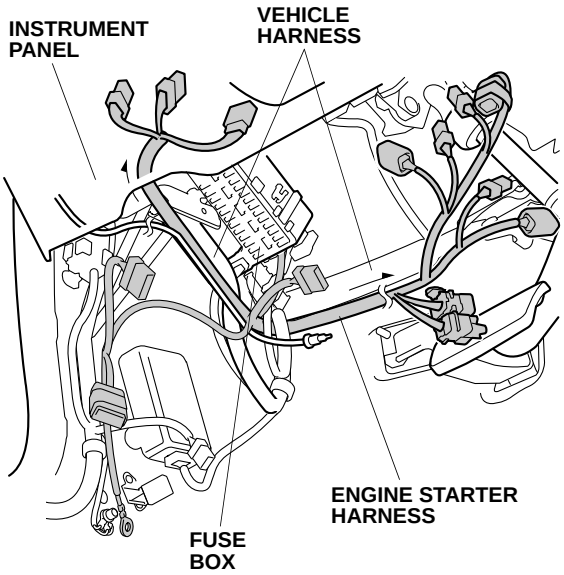

© 2010 American Honda Motor Co., Inc. – All Rights Reserved.

47. Unplug the vehicle 20-pin connector from the fuse box, and plug it into the engine starter harness 20-pin connector. Plug the remaining engine starter harness 20-pin connector into the 20-pin opening on the fuse box.

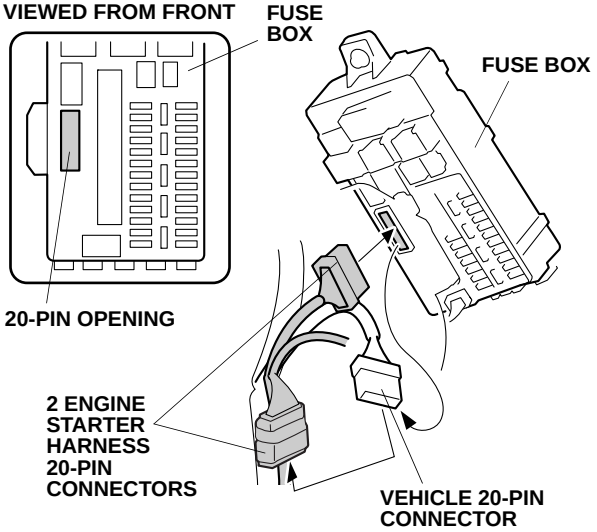

48. Plug the engine starter harness 12-pin connector into the 12-pin opening in the fuse box.

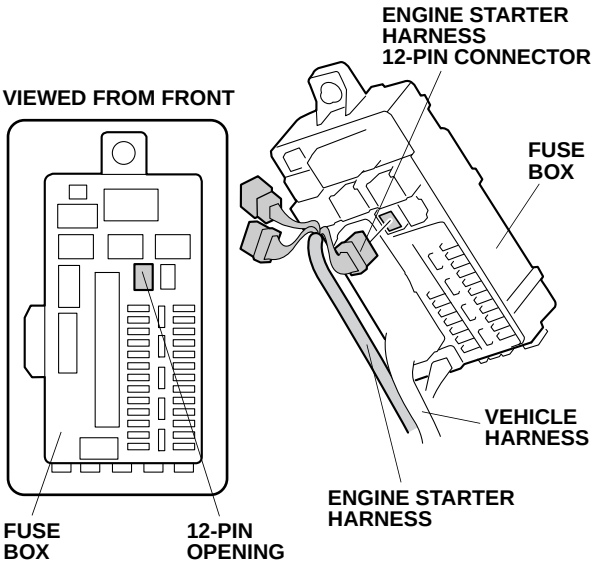

49. Unplug the vehicle 5-pin connector from the fuse box, and plug it into the engine starter harness 5-pin connector. Plug the remaining engine starter harness 5-pin connector to the 5-pin opening on the fuse box.

NOTE: Make sure the engine starter harness 5-pin connector is connected securely. A loose connection can cause the engine to stall.

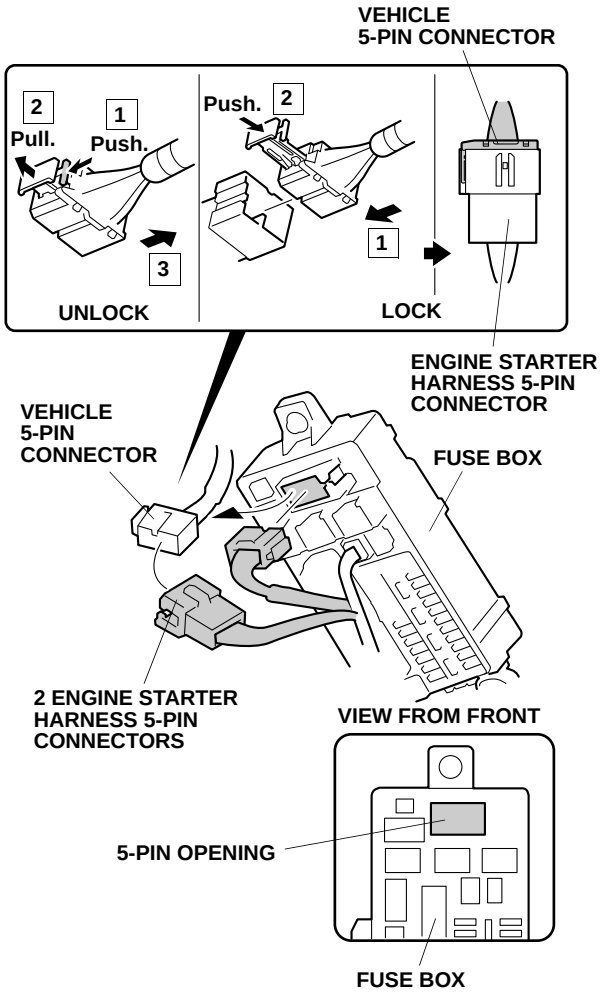

© 2010 American Honda Motor Co., Inc. – All Rights Reserved.

50. Secure the 5-pin connector to the vehicle harness with one wire tie.

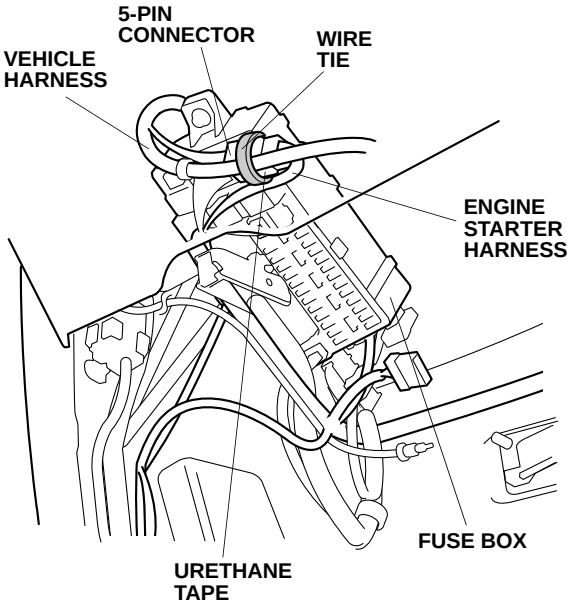

51. Remove the vehicle ground bolt, then use it to secure the engine starter harness ground terminal to the vehicle.

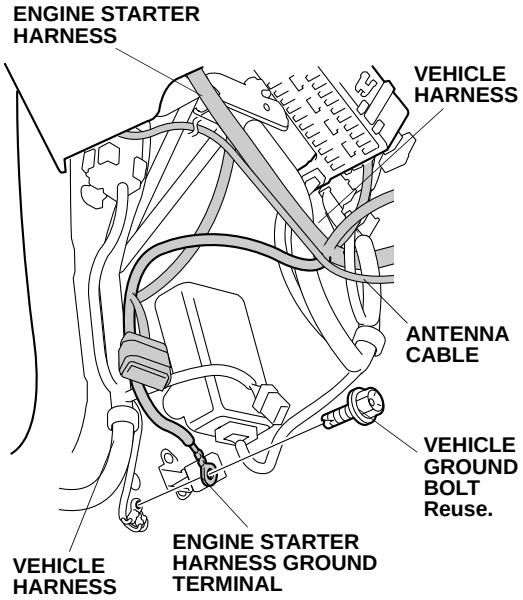

52. Secure the engine starter harness relay block to the parking brake pedal with one clip.

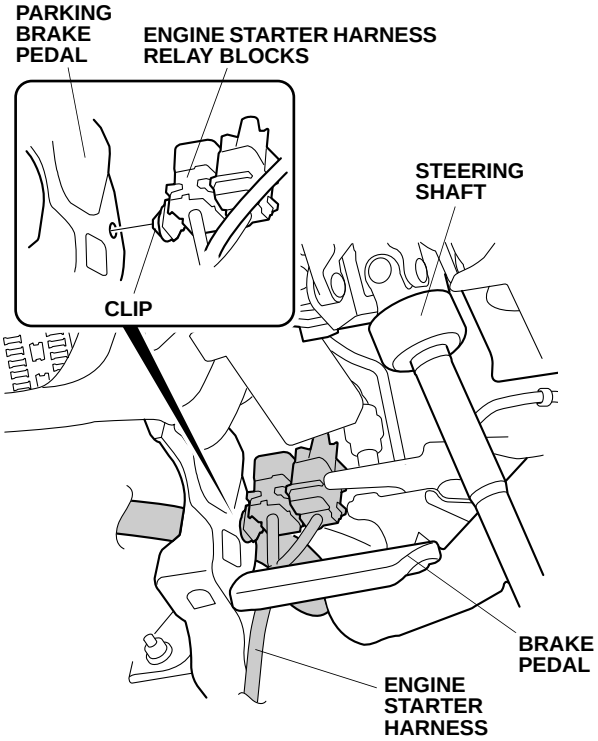

53. Secure the engine starter harness to the vehicle harness with three wire ties.

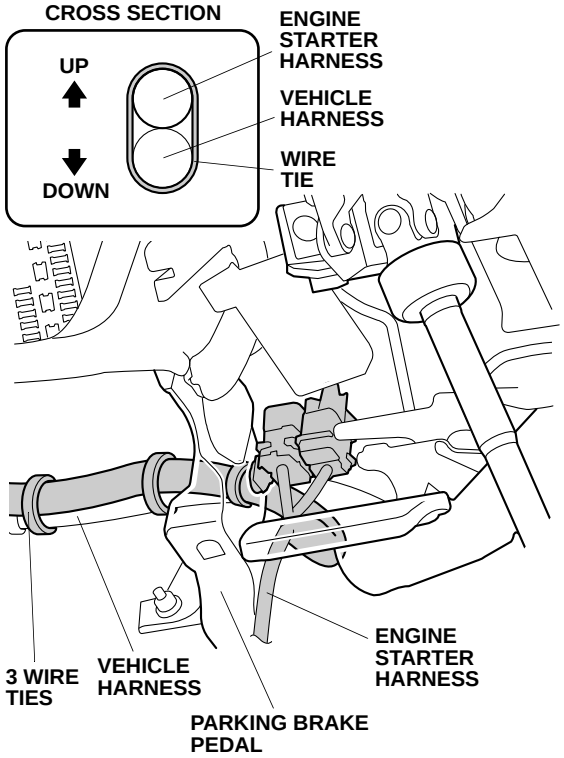

© 2010 American Honda Motor Co., Inc. – All Rights Reserved.

54. Plug the antenna cable terminal into the control unit.

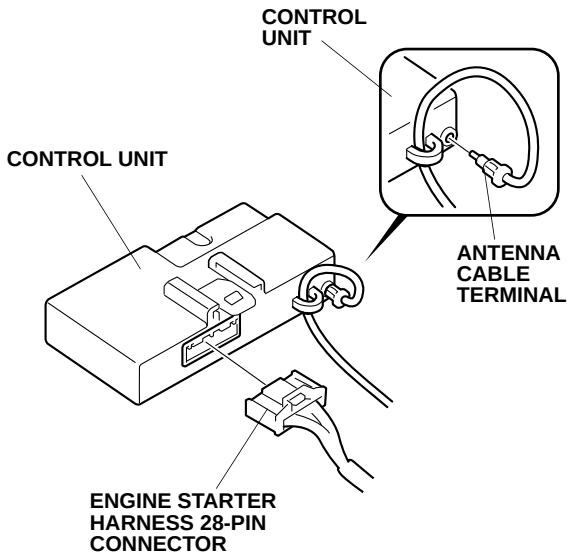

55. Plug the engine starter harness 28-pin connector into the control unit.

56. Install the control unit bracket to the control unit.

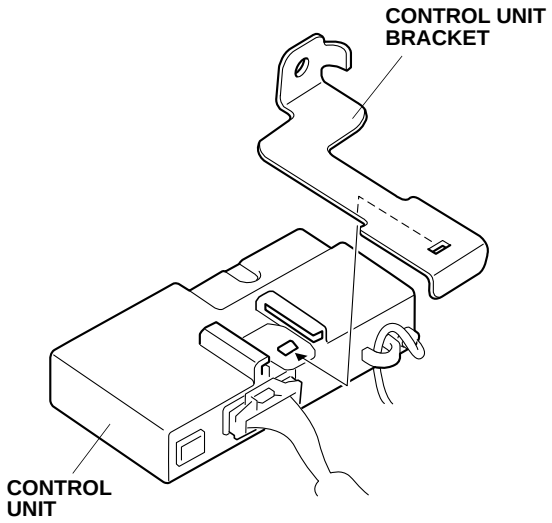

57. Remove the vehicle nut from the vehicle bracket, and secure the control unit bracket to the vehicle bracket with the vehicle nut just removed. Torque the vehicle nut to: 18.7 ~ 24.5 N·m (13.8 ~18.1 lbf·ft).

NOTE: Make sure the tab on the control unit bracket is pushed against the vehicle panel when securing the control unit bracket.

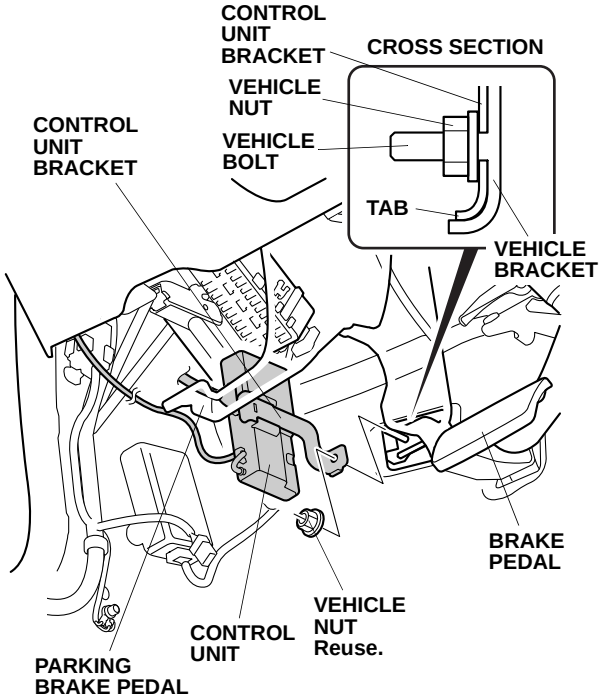

58. Secure the engine starter harness and antenna cable to the vehicle harness with four wire ties.

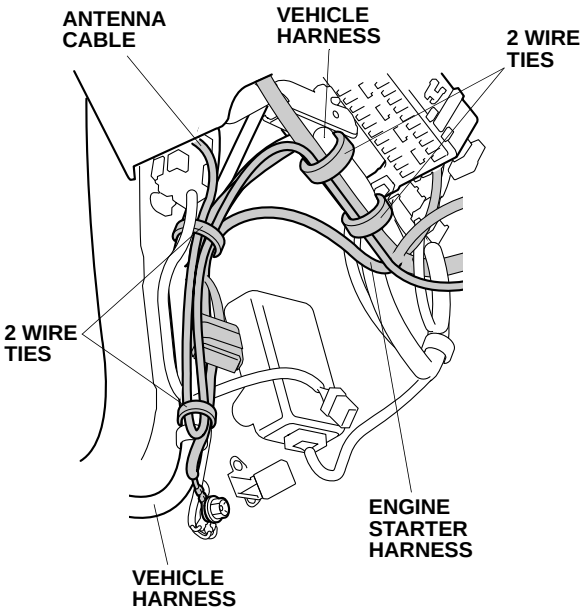

© 2010 American Honda Motor Co., Inc. – All Rights Reserved.

59. Route and secure the engine starter harness to the vehicle harness with two wire ties.

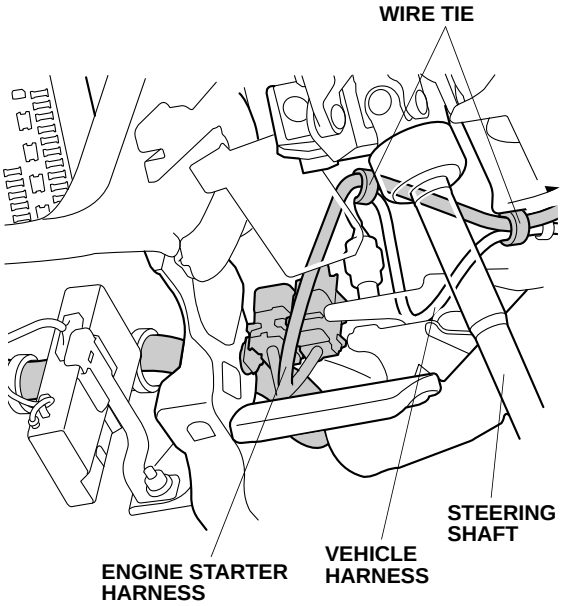

60. Route the engine starter harness as shown. Secure the engine starter harness at the white tape to the vehicle harness at the vehicle clip with one wire tie.

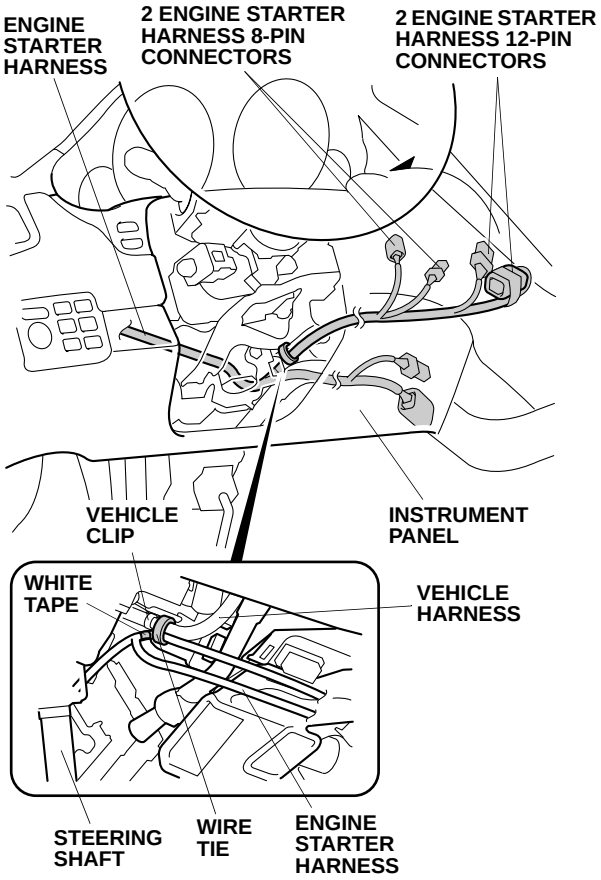

61. Secure the engine starter harness to the vehicle harness with one wire tie.

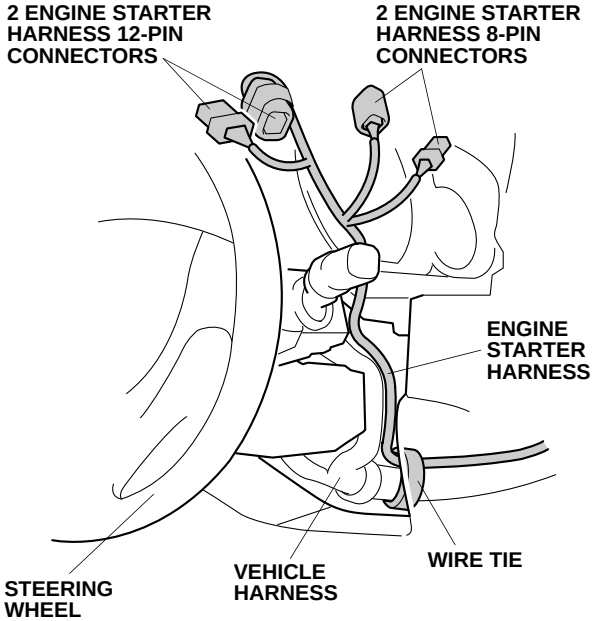

62. Unplug the vehicle 12-pin connector from the light/turn signal switch, and plug it into the engine starter harness 12-pin connector. Plug the remaining engine starter harness 12-pin connector into the light/turn signal switch.

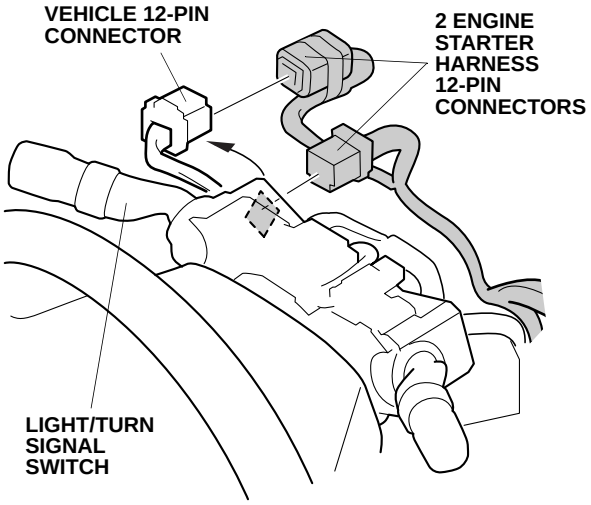

© 2010 American Honda Motor Co., Inc. – All Rights Reserved.

63. Unplug the vehicle 8-pin connector from the wiper switch, and plug it into the engine starter harness 8-pin connector. Plug the remaining engine starter harness 8-pin connector into the wiper switch.

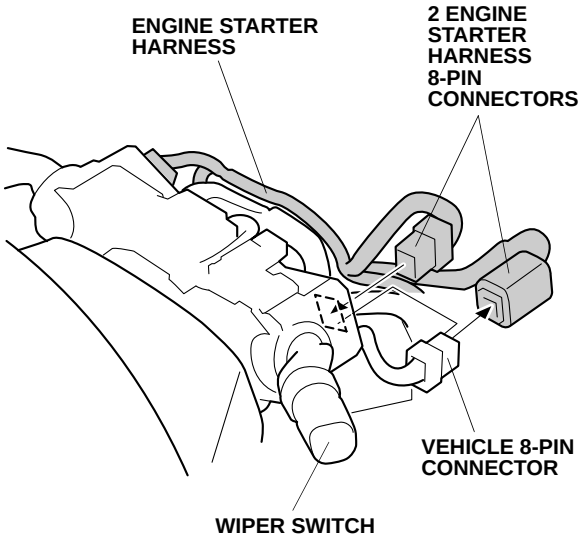

64. Secure the engine starter harness to the vehicle harness with three wire ties.

NOTE: Do not secure the wire tie to the SRS harness.

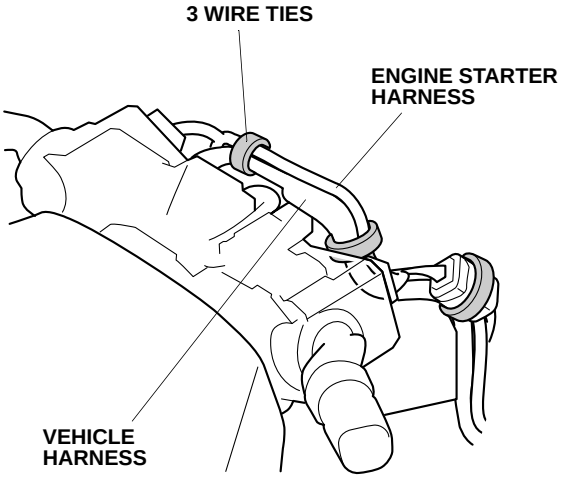

65. Route the engine starter harness to the driver's console side trim opening.

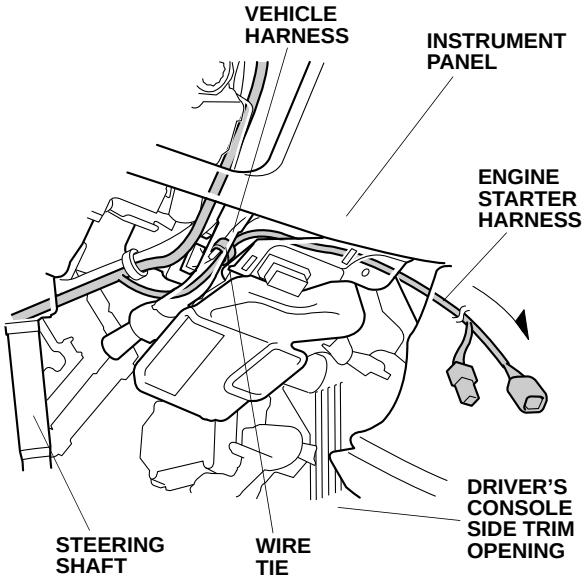

66. Secure the engine starter harness to the vehicle harness with one wire tie.

67. Secure the engine starter harness to the vehicle harness with one wire tie.

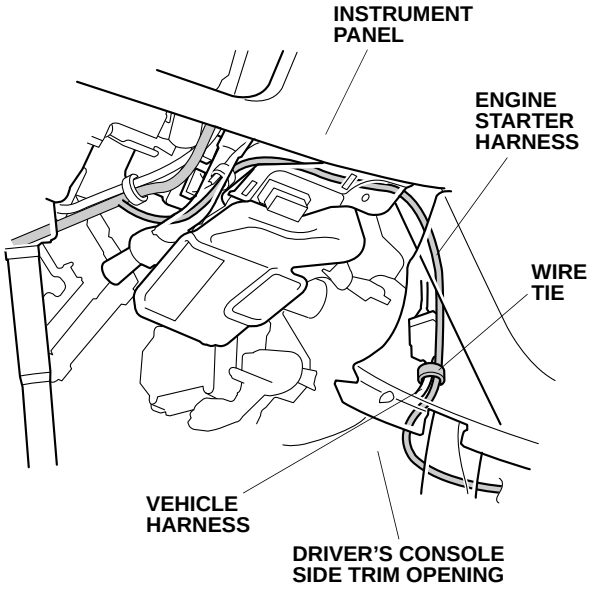

© 2010 American Honda Motor Co., Inc. – All Rights Reserved.

68. Unplug the vehicle 2-pin connector, and plug it into the engine starter harness 2-pin connector. Plug the remaining engine starter harness 2-pin connector into the vehicle 2-pin connector.

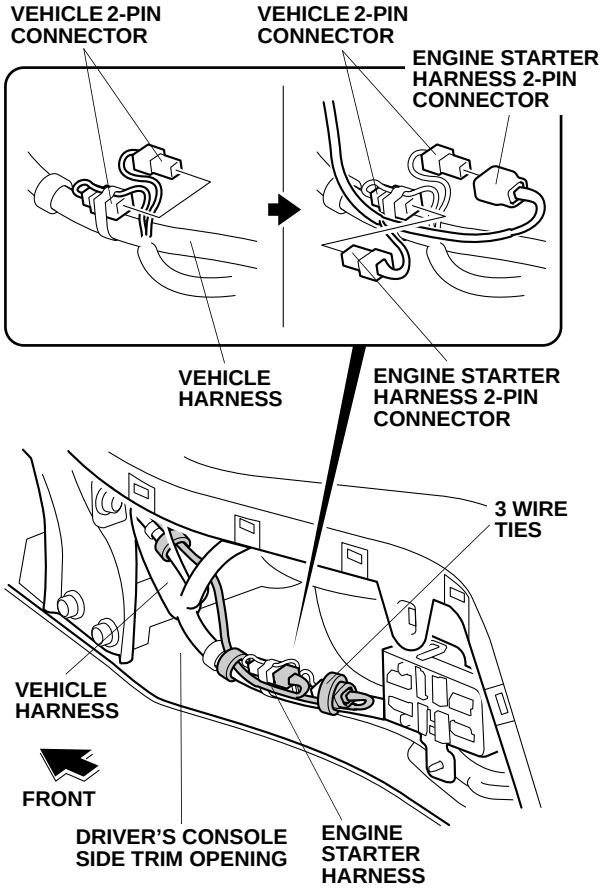

69. Secure the engine starter harness to the vehicle harness with three wire ties as shown.

70. Open the hood. Using isopropyl alcohol on a shop towel, thoroughly clean the area where the caution label will attach.

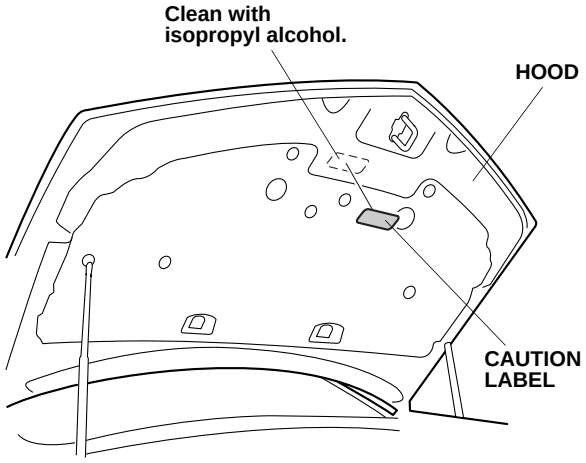

71. Attach the caution label to the hood in the area shown.
72. Check that all wire harnesses and cables are routed properly and that all connectors are plugged in.
73. Reinstall all removed parts. Do not pinch the side curtain airbag with the clip during reinstallation of the left A-pillar trim. Do not push very hard on the A-pillar trim.
74. Reconnect the negative cable to the battery.
75. Check the operation of the headlights and wipers.
76. Enter the anti-theft codes for the audio unit and the navigation system (if equipped), and reset the radio station presets.
77. Reset the clock on vehicles without navigation.
78. Proceed to the **REMOTE ENGINE STARTER REGISTRATION** (Page 18) and **FUNCTION CHECK** (Page 21).

© 2010 American Honda Motor Co., Inc. – All Rights Reserved.

REMOTE ENGINE STARTER REGISTRATION

1. Acquire a PCM Code from ISIS.

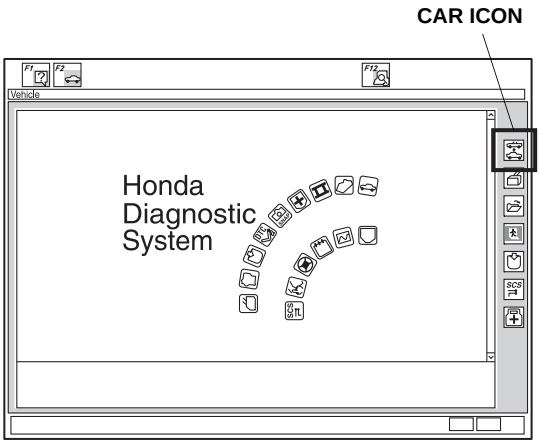

2. Connect the HDS tester to the OBD II data link connector, then turn the ignition switch on.
3. Start the HDS, and click the car icon.
4. Input the VIN and other required information, then click the check button.

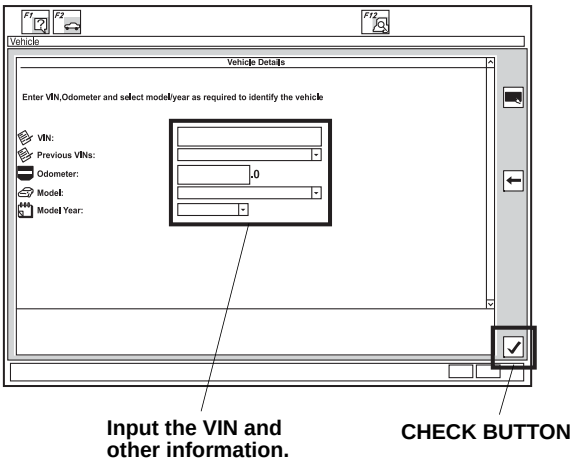

5. Select “Honda Systems,” then click the check button.

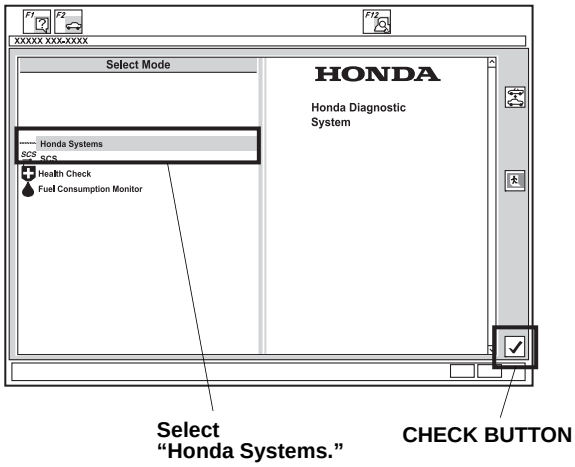

6. Select “R/C ENG STARTER,” then click the check button.

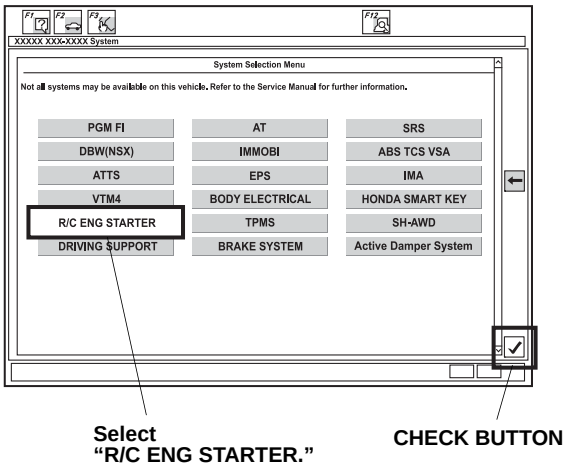

© 2010 American Honda Motor Co., Inc. – All Rights Reserved.

7. Check that “REMARKS” is shown, then click the check button.

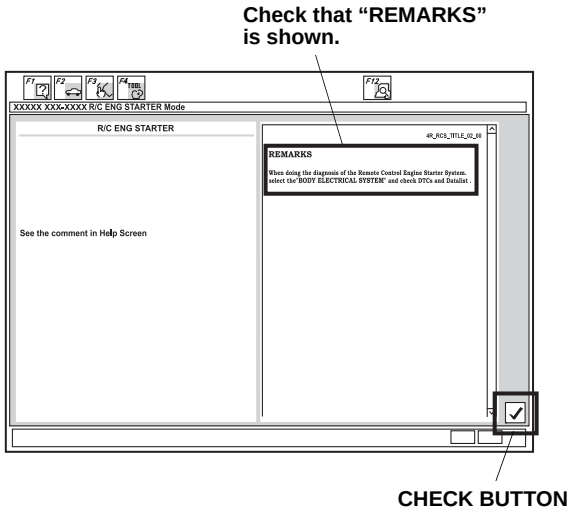

8. Select “REGISTER REMOTE CONTROL ENGINE STARTER UNIT”, then click the check button.

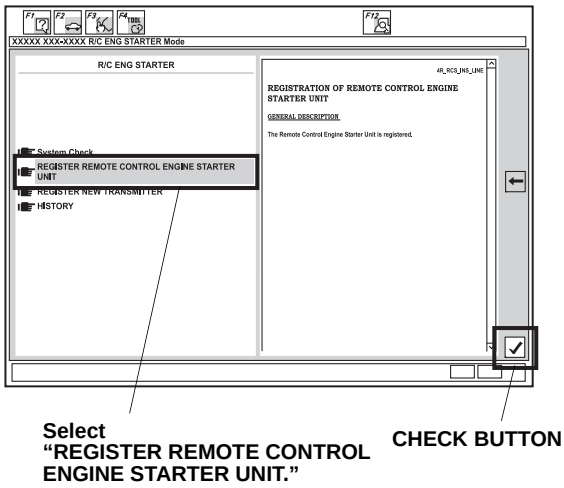

9. Check that “Obtain PCM-code (IMMOBILIZER PCM CODE) from iN. This vehicle’s VIN will be required to obtain the password. (USA)” is shown, then click the check button.

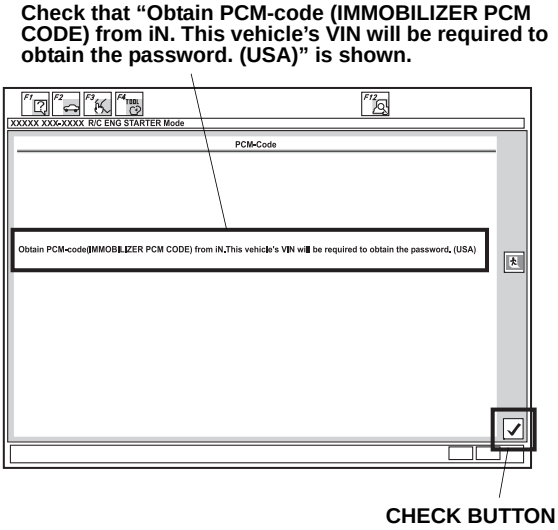

10. Input the PCM Code, then click the check button.
NOTE: To ensure security, the PCM code (password) is changed everyday, so it is impossible to register the remote controlled engine starter if the date of the PCM code acquisition and registration are different. The date of the HDS tester should also be the same.

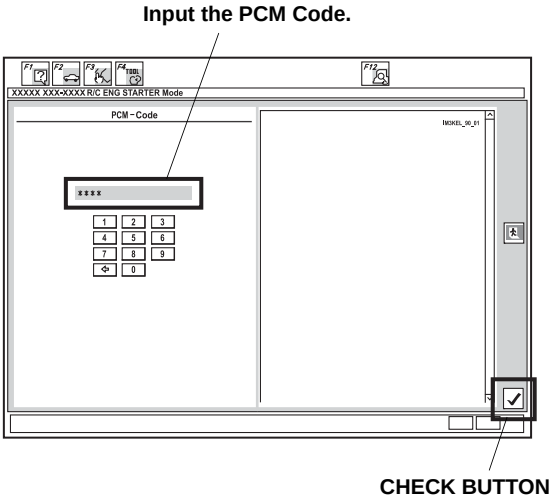

© 2010 American Honda Motor Co., Inc. – All Rights Reserved.

11. Check that “The registration of the Remote Control Engine Starter Unit has been completed” is shown, then click the check button.

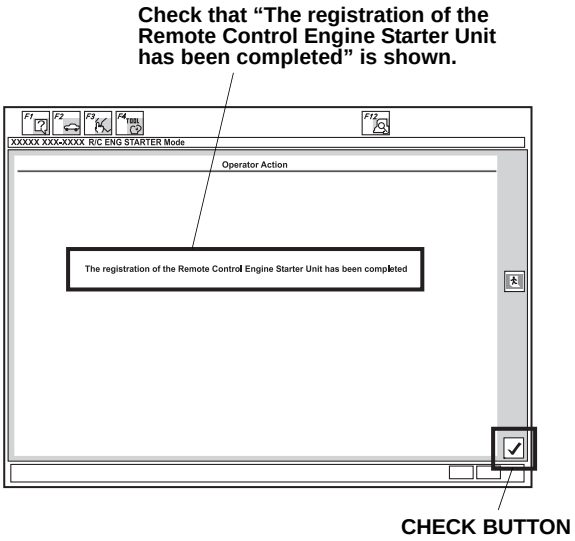

12. Check that “Check that the engine can be started by the Transmitter” is shown, then click the check button.

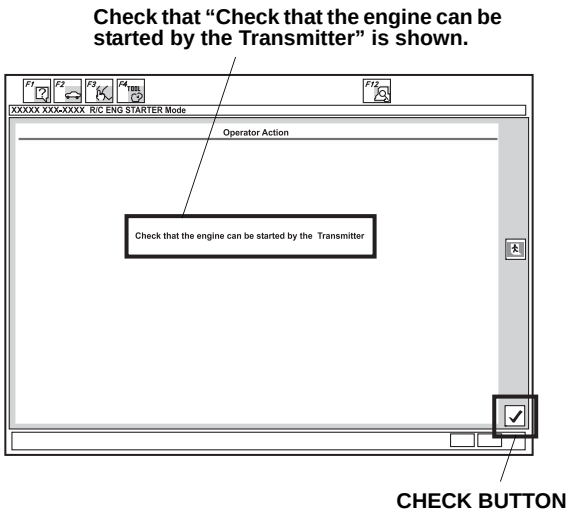

13. Perform the function test on the next page, then remove the HDS.

© 2010 American Honda Motor Co., Inc. – All Rights Reserved.

FUNCTION CHECK

Operating Conditions

- Hood is closed
- Shift lever is in park
- The key is out of the ignition and the key is outside the vehicle
- All doors and tailgate are closed and locked

Inspection

1. Press the command button on the transmitter and, within 1 second, press the start button. The engine should start if all operating conditions are met.

Does the engine start?

Yes - Operation is normal.
No: • Make sure all “Operating Conditions” are met. • Check the engine starter harness connections. • Connect the HDS and check for an indicated failure. (Refer to the appropriate service manual for details.)

2. Press the command button on the transmitter and, within 1 second, press the stop button. The engine should stop.

Does the engine stop?

Yes - Operation is normal.
No - Check the engine starter harness connections.

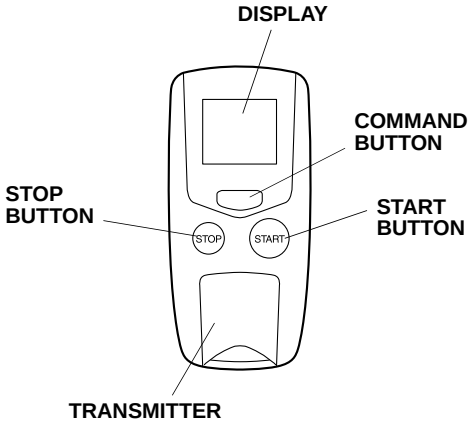

3. After the engine has stopped, start the engine again, and check that the engine stops after each of the following conditions:

   NOTE: After each test the ignition key must be cycled, or the driver’s door must be opened and closed.

   - Move the shift lever out of the P position.
   - Unlock or open the doors or the tailgate.
   - Open the hood.
   - Insert the key in the ignition.
   - Press the brake pedal.

Does the engine stop after each of these tests?

Yes - Operation is normal.
No - Check the engine starter harness connections.

4. Check that the power windows or the moonroof does not function and the shift lever does not move to any position but the P position when the engine is started with the transmitter.
5. Press the command button on the transmitter two times and check the vehicle condition on the display.
6. Check the operation of the transmitter when the vehicle is 100 m to 150 m (325 to 490 ft.) away, and in direct sight.

© 2010 American Honda Motor Co., Inc. – All Rights Reserved.